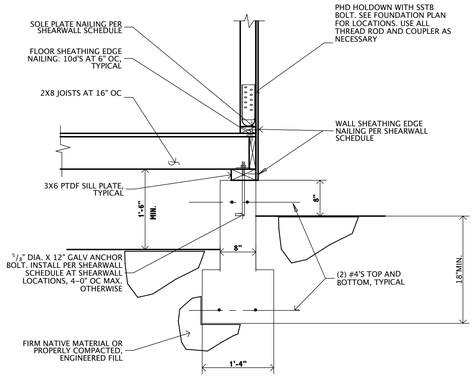

NOTE:
INSTALL A MIN. OF (2) ANCHOR BOLTS EA. SILL PIECE, 6" MIN, 12" MAX. FROM EACH END. USE 3" SQ. X 1/4" PLATE WASHERS, TYPICAL

1 TYPICAL RAISED FLOOR FOUNDATION

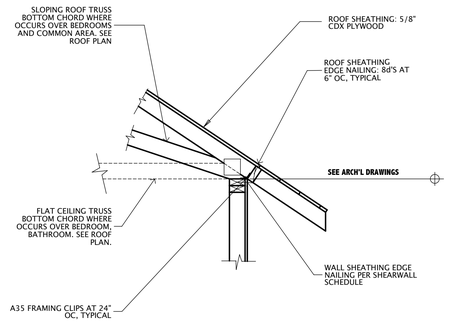

2 TYPICAL ROOF SHEAR TRANSFER

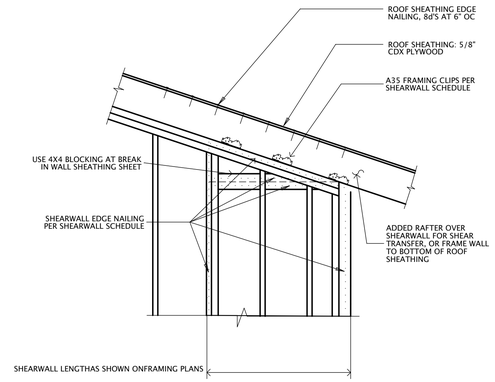

3 RAKE SHEARWALL DETAIL

SHEARWALL SCHEDULE

SYMBOL	SHEATHING AND NAILING	ANCHOR BOLTS	SOLE PLATE NAILING	FRAMING CLIPS	ALLOWABLE SHEAR
0	WALLS LINES DESIGNATED WITH THIS SYMBOL ARE TO BE CONVENTIONAL BRACED WALL PANELS MEETING THE REQUIREMENTS OF UBC SECTION 2308.12.4. 1/2" CDX SHEATHING OVER 2X4 STUDS AT 16" OC WITH 8d'S AT 6" OC EDGE, 12" OC FIELD. FOR ANCHOR BOLTS AND SILL PLATE NAILING, USE SAME AS FOR SYMBOL 1. BELOW.				
1	1/2" CDX PLYWD SHEATHING WITH 8d'S AT 6" EDGE, 12" FIELD	5/8" DIA. X 12" LONG BOLTS AT 4'-0" ON CENTER	(3) 16d'S EVERY 16" ON CENTER	18" OC	260 PLF

SHEARWALL SCHEDULE FOOTNOTES

1. ALL PANEL EDGE SHALL BE BACKED BY 2 INCH NOMINAL OR WIDER FRAMING.
2. WHERE PANELS ARE APPLIED TO BOTH SIDES OF WALL, OFFSET PANEL JOINTS FROM EACH SIDE.
3. USE DOUBLE 2X BOUNDARY MEMBER AT EACH END OF SHEARWALL, U.N.O. ON THE PLANS.
4. ALL BRACED WALL LINES HAVING SHEARWALLS SHALL HAVE A DOUBLE TOP PLATE SPLICED AS SHOWN ON THIS SHEET, OR TIED TO A COLLECTOR MEMBER AS SHOWN ON THE FRAMING PLANS.
5. ALL ANCHOR BOLTS SHALL HAVE A MINIMUM OF A 3"X3"X1/4" PLATE WASHER PER CBC 2305.3.11.
6. WHERE THE ALLOWABLE SHEAR EXCEEDS 350 PLF, FOUNDATION SILL PLATES AND MEMBERS RECEIVING EDGE NAILING FROM ADJOINING PANELS SHALL BE NOT LESS THAN 3 INCH NOMINAL FRAMING. NAILS SHALL BE STAGGERED
7. ALL NAILS SHALL BE COMMON OR HOT DIPPED GALVANIZED
8. ALL NAILS INSTALLED INTO PRESERVATIVE TREATED LUMBER SHALL BE HOT DIPPED GALVANIZED OR STAINLESS STEEL DUE TO THE CORROSIVE NATURE OF THIS MATERIAL ON FASTENERS.
9. FRAMING CLIPS PER THIS SCHEDULE ARE ONLY REQUIRED AT LOCATIONS WHERE THE SHEARWALL PLYWD IS INTERUPTED, IE AT INTERIOR SHEARWALL LOCATIONS WHERE THE SECOND FLOOR FRAMING CAUSES A BREAK IN THE SHEARWALL SHEATHING.
10. WHERE THE SHEARWALL SHEATHING IS APPLIED OVER 1/2" DRYWALL, USE 10d NAILS.
11. VALUES SHOWN ARE FOR 1/2" CDX PLYWOOD SHEATHING.

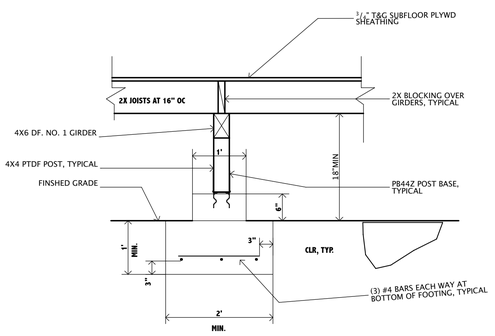

4 RAISED FLOOR- ISOLATED FOOTING

ROOF FRAMING NOTES:

1 DENOTES SHEARWALL: 1/2" CDX PLYWOOD WITH 8d's @ 6" EDGE, 12" FIELD. SEE PLAN FOR HOLDOWN LOCATIONS.

0 DENOTES BRACED WALL PANEL: 1/2" CDX PLYWOOD WITH 8d's @ 6" EDGE, 12" FIELD, NO HOLDOWN REQUIRED. SEE PLAN FOR LENGTH.

"CALIFORNIA" FRAME ON SITE

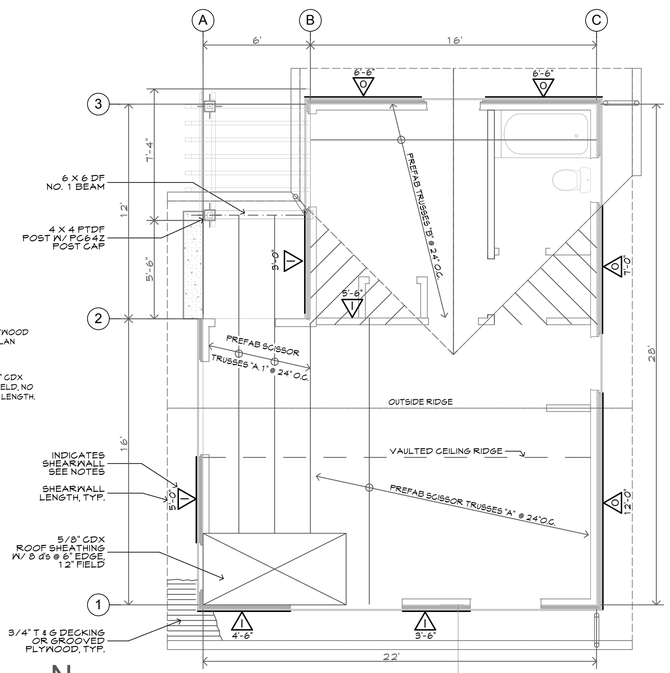

N

(REFERENCE ONLY)

Roof Framing Plan

SCALE: 1/4" = 1'-0"

FOUNDATION PLAN NOTES:

1) 1 DENOTES TYPICAL HOLDOWN DEVICE FOR TYPE 1 SHEARWALL. PHD2-SDS3 BY SIMPSON.

2) 1 S.F. OF CROSS VENTILATION PER 150 S.F. OF UNDERFLOOR AREA REQUIRED

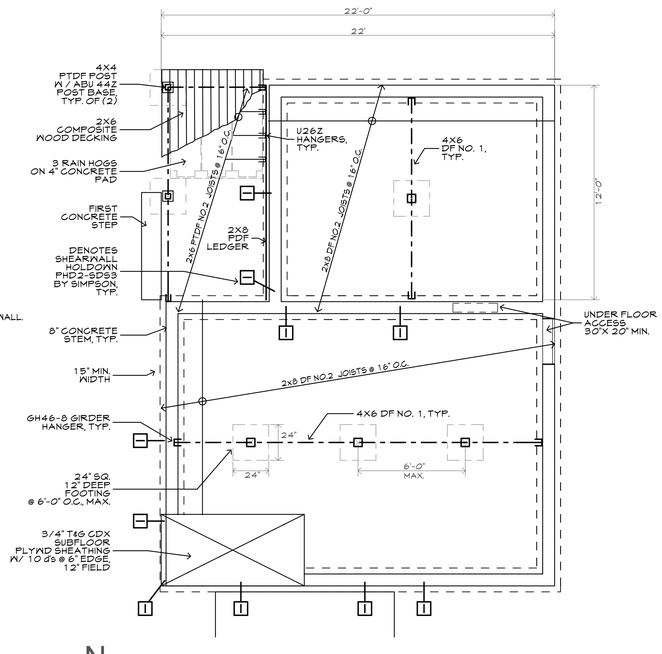

N

(REFERENCE ONLY)

Foundation Plan

SCALE: 1/4" = 1'-0"

NOTE:
THESE MATERIALS ARE CONCEPTUAL IN NATURE ONLY AND SHOULD NOT BE USED AS WORKING DRAWINGS OR CONSTRUCTION DOCUMENTS

Boone Low Ratliff Architects, Inc.

Boone Low Ratliff
Architects, Inc.
157 Van Ness Ave.
Santa Cruz, CA 95060
Tel: 831-423-1316
Fax: 831-423-1386
email: admin@boonelow.com

PROJECT

ACCESSORY DWELLING UNIT (ADU)
PROTOTYPE
CITY OF FORT BRAGG
416 N. FRANKLIN STREET
FORT BRAGG, CA 95437

DRAWING

Foundation Plan / Roof Framing Plan / Structural Details

PROTOTYPE DESIGN SET

DATE

07/03/2009

SHEET

S1